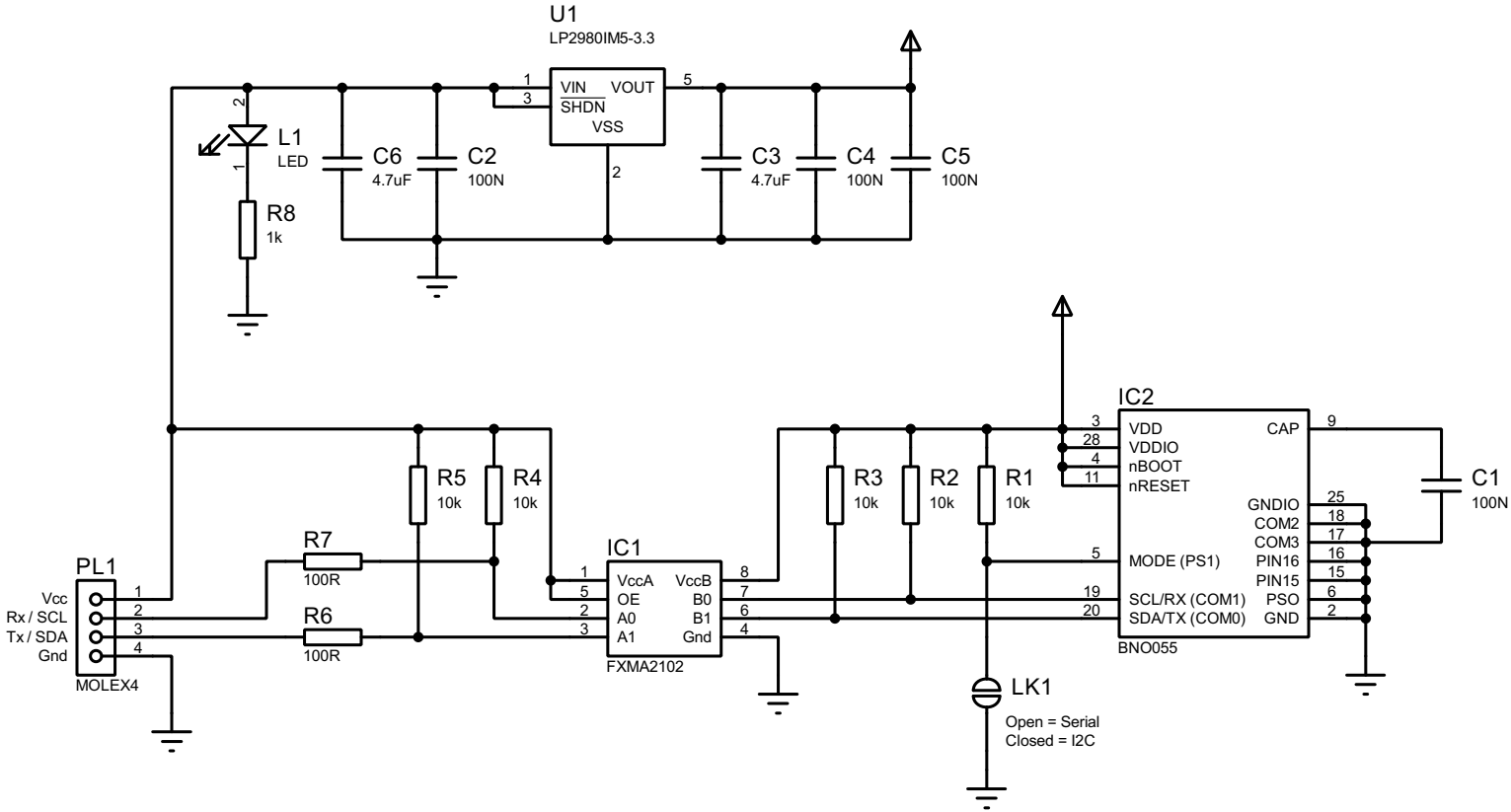
U1
LP2980IM5-3.3
VIN
VOUT
SHDN
VSS
L1
LED
R8
1k
C6
4.7uF
C2
100N
C3
4.7uF
C4
100N
C5
100N
IC2
VDD
VDDIO
nBOOT
nRESET
CAP
GNDIO
COM2
COM3
PIN16
PIN15
PSO
GND
MODE (PS1)
SCL/RX (COM1)
SDA/TX (COM0)
BNO055
C1
100N
R5
10k
R4
10k
R3
10k
R2
10k
R1
10k
R7
100R
R6
100R
IC1
VccA
VccB
OE
B0
A0
B1
A1
Gnd
FXMA2102
PL1
Vcc
Rx / SCL
Tx / SDA
Gnd
MOLEX4
LK1
Open = Serial
Closed = I2C